GB Skyscraper HD4240TV

Top Vent Gas Fireplace by Golden Blount

Shown with Texas Bonfire style logs and Firebrick Charcoal panels

ENERVEX® VENTING DESIGN SOLUTIONS

Now approved for GB Fireplaces horizontal or vertical venting commercial or residential applications

- Gigantic 42”W x 36”H opening
- Realistic flames 100,000 BTU/HR
- High dome design for efficient up-draft
- Highly detailed refractory panels in 2 styles, 4 colors
- Patented damper controlled gas supply
- 30” award winning logs
- Clean face design
- Standing pilot or optional spark to pilot ignition
- Uses 10” B-vent
- Includes our patented CEBB Controlled Ember Bed Burner

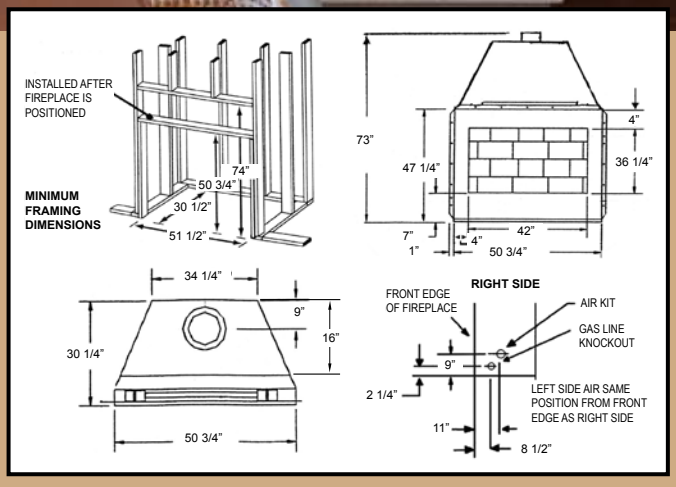

4301 Westgrove Drive • Addison, Texas 75001 • 800-833-1139 • www.goldenblountinc.com

El Grande HD5030TV

Top Vent Gas Fireplace by Golden Blount

Shown with Texas Stack Logs and Charcoal Herringbone Refractory Panels

- Gigantic 50”W x 30”H opening (largest in industry)
- Realistic flames 100,000 BTU/HR
- High dome design for efficient up-draft
- Highly detailed refractory panels (standard)
- Patented damper controlled gas supply
- 36” award winning logs
- Clean face design
- Standing pilot or optional spark to pilot ignition
- Uses 10” B-vent
- Includes our patented CEBB Controlled Ember Bed Burner

Controlled EMBER-BED BURNER

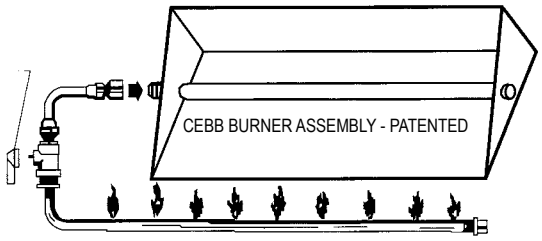

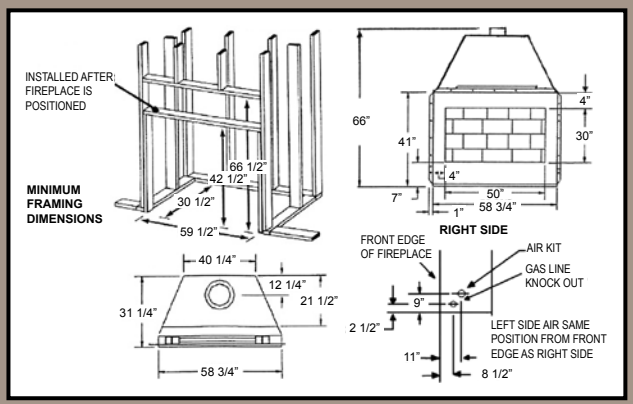

Golden Blount 4301 Westgrove Drive • Addison, Texas 75001 • 800-833-1139

GB SF3624TV

Top Vent Gas Fireplace by Golden Blount

Shown with Texas Bonfire Logs and Antique Red Herringbone Refractory Panels

- 36”W x 24”H opening
- Uses 8” B-Vent pipe
- Choice of 3 log styles
- Highly detailed refractory panels in 2 styles, 4 colors
- 50,000 BTUs

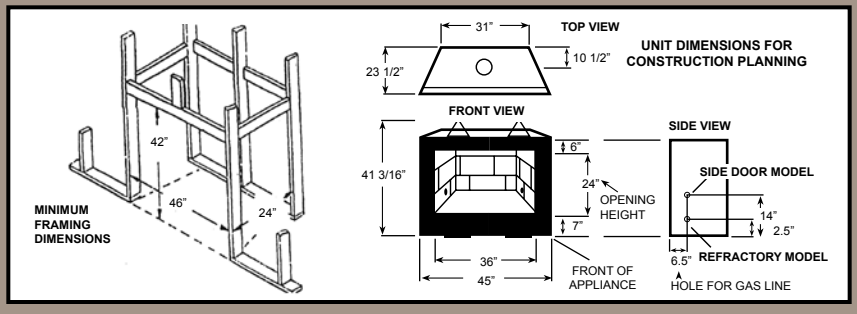

SF4224TV

Top Vent Gas Fireplace by Golden Blount

Shown with Texas Stack Logs and Charcoal Fire Brick Refractory Panels

- 42”W x 24”H opening
- Uses 8” B-vent pipe
- Choice of 3 log styles
- Highly detailed refractory panels in 2 styles, 4 colors
- 50,000 BTUs

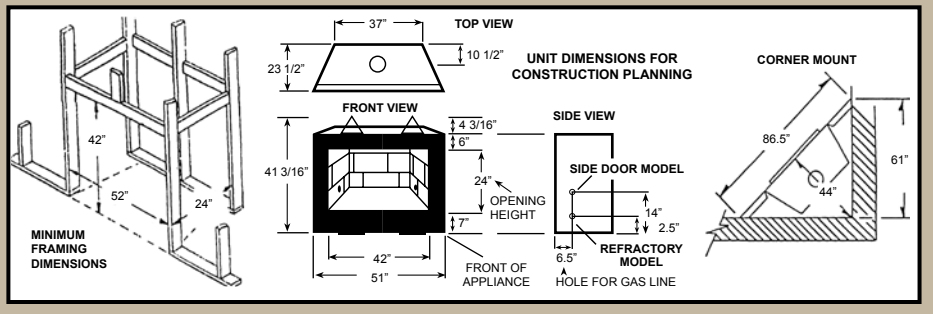

Top Vent Options & Accessories

by Golden Blount

Three award winning log styles to choose from

STACK STYLE

BONFIRE STYLE

HICKORY STYLE

- NG or LP available
- Remote controls:
  Sky 1001 on/off
  Sky 3003 thermostat remote
- Millivolt or spark to pilot
- Mesh doors
- Mesh curtain screen
- High quality glass doors in 10 finishes:
  - antique brass (AB)
  - black (BL)
  - brushed steel (BS)
  - antique copper (AC)
  - antique pewter (AP)
  - textured black (TB)
  - rusted iron (RI)
  - oiled bronze (OB)
  - charcoal (CH)
  - polished brass (PB)

AB BL BS AC AP TB RI OB CH PB

Screens & Doors

CABINET STYLE MESH DOORS

GLASS DOORS (10 FINISHES AVAILABLE)

Refractory Panels Options

ANTIQUE RED HERRINGBONE

CHARCOAL HERRINGBONE

BUFF HERRINGBONE

GREY FIREBRICK

GB Outdoor HD4236

Gas Log Fireplace by Golden Blount

Shown with Model RLS30 Logs

- Large 42”W x 36”H opening, 25” interior depth
- Includes choice of charcoal refractory panels, herringbone or running bond
- Galvanized steel construction, fully powder coated exterior for outdoor durability
- Refractory floor standard
- Can be used with any vented or vent free gas log
- 10” B-Vent exhaust collar
- Finish material not included

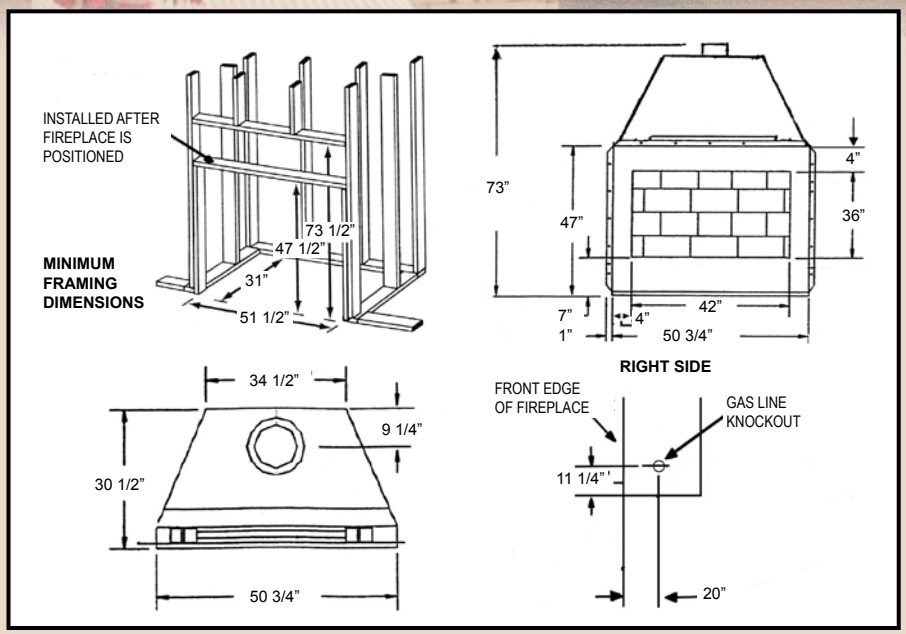

Golden Blount
4301 Westgrove Drive • Addison, Texas 75001 • 800-833-1139
www.goldenblountinc.com